TECO

OUTLINE DIMENSIONS
3-PHASE INDUCTION MOTOR

FRAME NO : D100L

POLE	kW	HP	RPM	FRAME
6	1.5	2	950	D100L-6

Totally Enclosed Fan-Cooled Type, Squirrel-Cage Rotor.

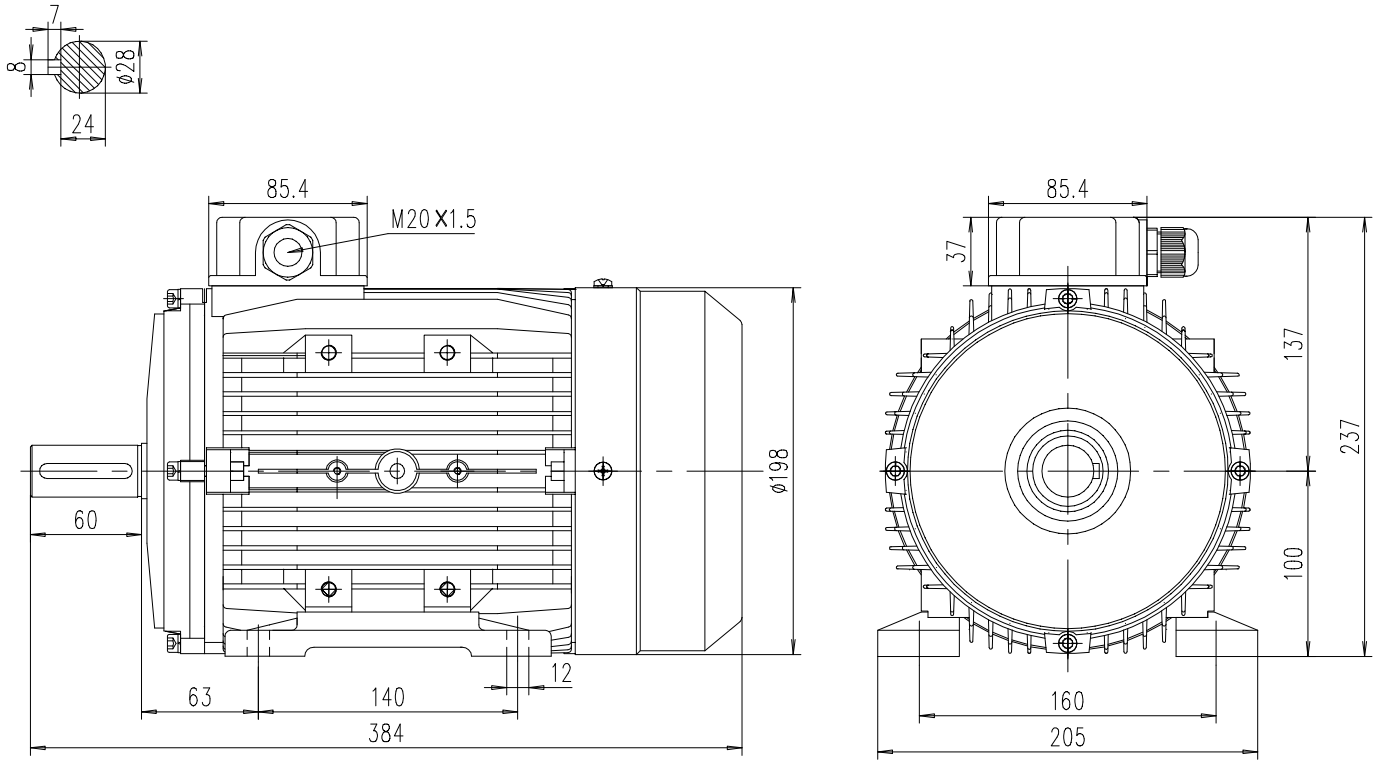

NOTES:

1. DIMENSIONS IN mm.
2. FOOT MOUNTED IM1001.
3. IP55 PROTECTION.

MAX ALLOY

DWN.	LL	24.07.25	東元電機股份有限公司 TECO ELEC. & MACH. CO., LTD. TAIWAN R.O.C.
CHKD.	DP	24.07.25	
APPD.	AN	24.07.25	

REV : 00